A GUIDE FOR HOME BUILDERS I CONTRACTORS I DIYERS

Technical Bulletin

Medium Density Fiberboard (MDF) Mouldings

COMPOSITE PANEL ASSOCIATION

MDF

Medium Density Fiberboard (MDF) is a composite panel product manufactured from wood fibers and synthetic resin binders bonded together under heat and pressure. The fibers and resin form a homogeneous board with consistent properties in each direction.

MDF Mouldings and Millwork

MDF is an exceptional product for mouldings and millwork. The surface is flat, smooth, uniform and free of knots and grain. MDF is easily shaped into almost any form. High quality, clean, sharp contours and edges can be achieved in a wide range of profiles.

The homogeneous composition of MDF is well matched for high quality finishing techniques. MDF's uniform composition and smooth, tight surface, allows finishes to be applied directly to the surface. There are no finger joints so it is easy to create an even finish.

MDF mouldings and millwork are easy to work with at the job-site. Mouldings are commonly available in lengths up to 16 feet (4.8 meters) and jambs are available in door height lengths. MDF millwork is available as casing, crown, jambs, baseboard, chair rails and many other profiles.

MDF MOULDINGS

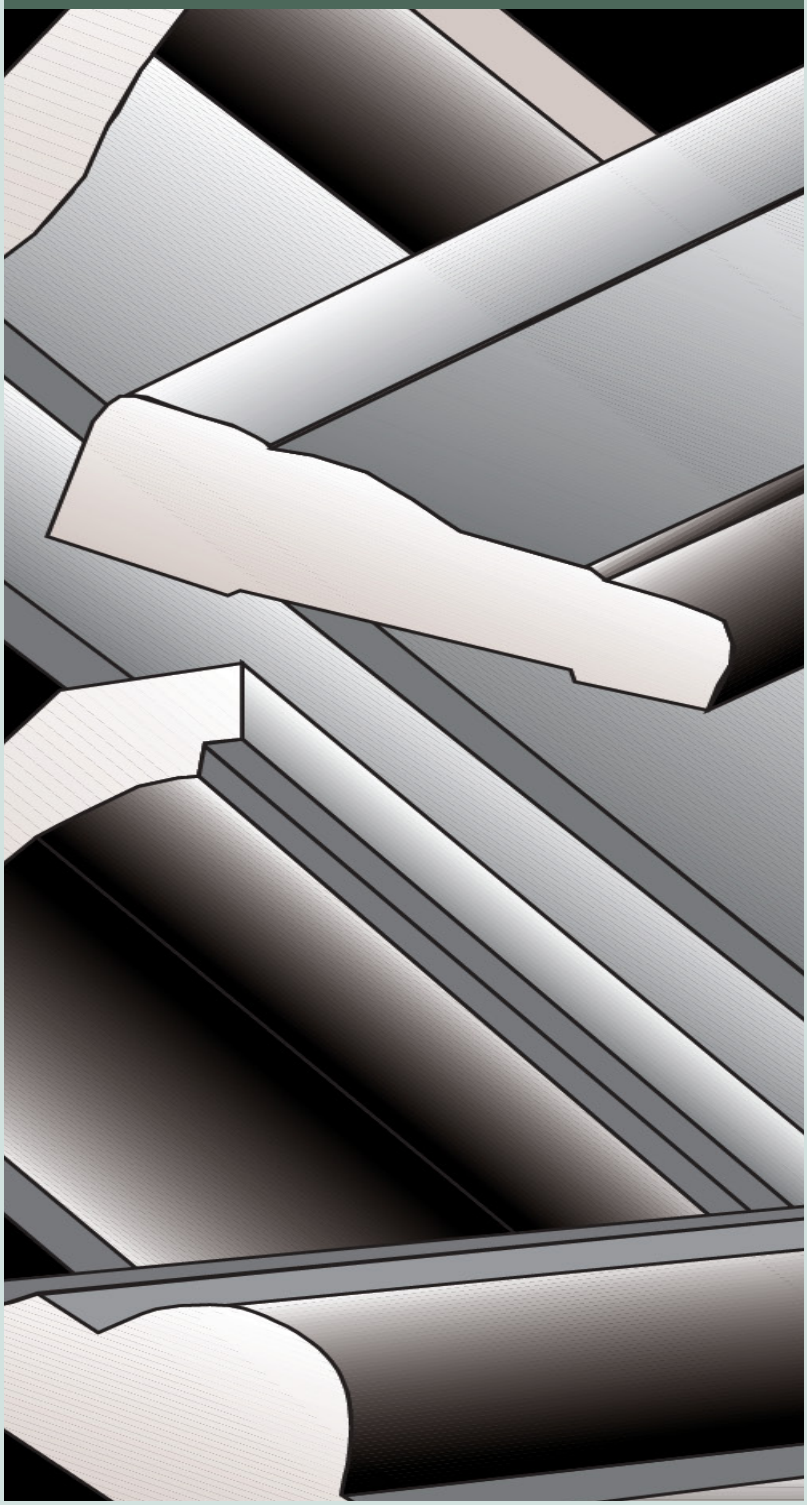

Products

Most MDF moulding and millwork comes preprimed. Veneer wrapped or prefinished MDF products are available when stain finishes are needed. MDF mouldings are intended for interior use only, unless otherwise recommended by the manufacturer.

Wrapped and Prefinished Mouldings

MDF mouldings are available with veneer, paper or other overlays. Special machines wrap the veneer or overlay over the profile. Grain printed and prefinished MDF mouldings are also available. Each provides the same ease of installation as standard MDF mouldings.

Moisture Resistance

MDF mouldings with properties that enhance moisture resistance should be considered for use in bathrooms and for baseboards where the construction is slab-on-grade. While the most common adhesive for MDF is urea-formaldehyde, other adhesives or additives may be used to provide special properties such as reduced thickness swell or enhanced bond durability.

Exterior Use MDF

MDF can also be manufactured with special adhesives suitable for exterior applications. Uses include brick moulding, mouldings around doors and windows, exterior window sills, column facings, gable vents and louvers, soffit trim and other exterior trim.gable vents and louvers, soffit trim and other exterior trim.

WRAPPED PROFILES

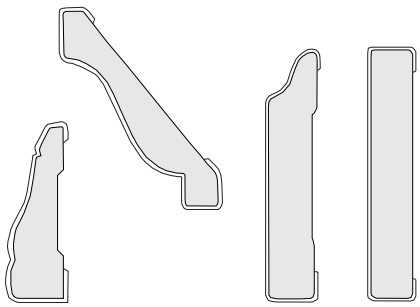

TYPICAL MOULDING PROFILE

Casing

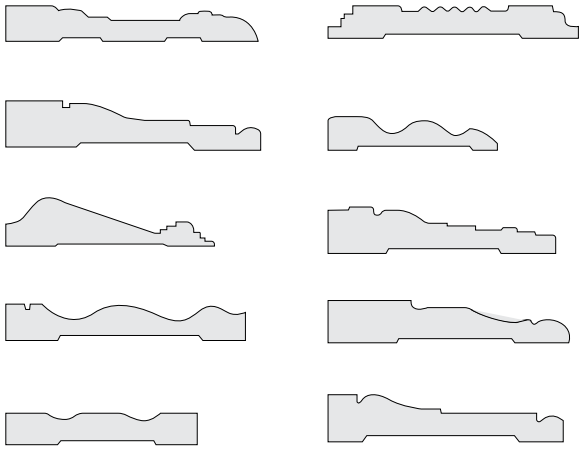

Base

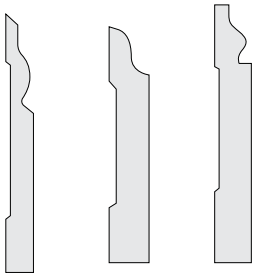

Crown

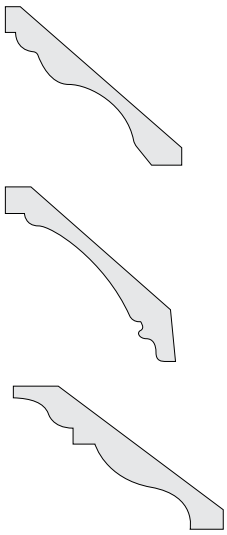

Window Sill

Jamb

Standards

Whenever possible, specify MDF manufactured to American National Standards Institute (ANSI) A208.2 (current year). This standard includes provisions for physical and mechanical properties and limits the amount of formaldehyde emissions.

Many North American MDF products are certified for formaldehyde emissions by the Composite Panel Association or other third-party certification agencies. An example of a typical CPA Certification is shown in Figure 1.

FIGURE 1

The example certification mark above will include the following information in close proximity to the CPA logo.

- Which ANSI standard the MDF conforms to including the year of the standard
- Mill Number
- Company name; Location of mill; Production date/shift.

Storage and Handling

Moulding is generally delivered to the job site in cartons. MDF products must be stored inside and in a horizontal position.

Protect from Water

Protect the moulding from moisture during storage and construction. This will help avoid extra preparation or field sanding. In addition, water-based primers used with MDF moulding may produce “fiber raise” with any significant contact with water.

Allow MDF to Acclimate

Like solid wood, MDF changes dimensionally with changes in relative humidity. It is important to store MDF products on site for a minimum of 24 hours or longer in the environment in which they will be installed. This will help them become acclimatized to the moisture conditions at that location. To speed the process the cartons may be opened and the moulding removed and stickered.

PREHUNG UNITS AND MOULDING SITE STORAGE

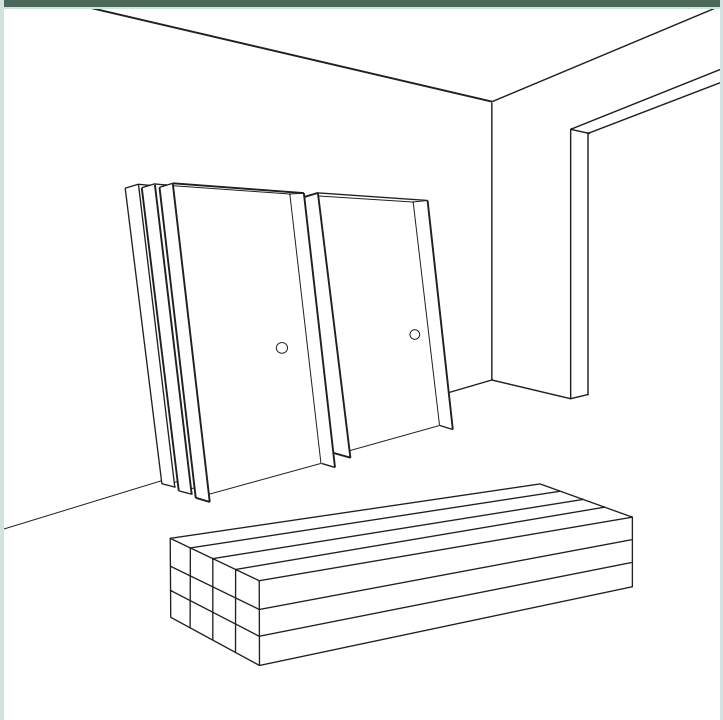

Fastening

MDF moulding may be fastened with nails, staples, screws, bolts or other suitable methods.

Power Nailing

Most MDF moulding is installed with power nailers. Slim "needle" nails with slight heads are best. Nail 1/4 inch (6.35 mm) from edges and 1 inch (25.4 mm) from ends. Adjust nailing tool as recommended by the equipment manufacturer to drive the fastener as flush with the surface as possible.

POWER NAILING

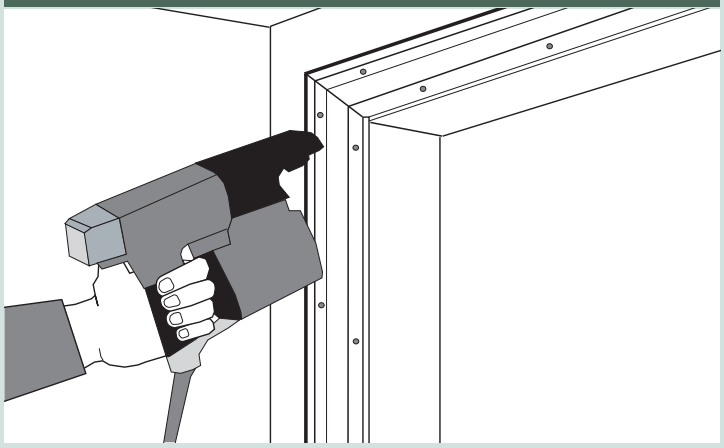

Casing Miters

It is not necessary to fasten MDF miters together as MDF does not shrink enough to open the miter. A nail through the face of a mitered corner against the wall should hold the joint closed. Placing a spline or fastener into the upper miter edge of a casing head and leg joint is not necessary and may split the casing.

NAILING MITERS

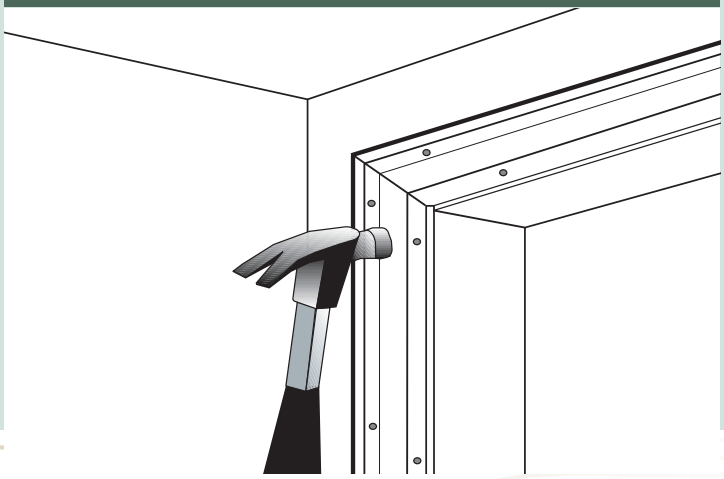

Manual Nailing

Ring shank nails are preferable to conventional finish nails. They provide extra holding power and avoid puckering or fiber raising around the nail head.

Staples

Narrow coated crown staples with a chisel point penetrate MDF mouldings in a consistent manner without puckering, dimpling, or splitting. Finer gauge staples work better than heavier gauges.

Screws

Predrilled pilot holes are strongly recommended and should be 85 to 90% of the root-diameter of the screw. Drill to a depth equal to or slightly more than the screw's length. A slight countersink may also be desirable to prevent pyramiding under flush mounted hardware. Do not overtighten the screws.

Use a high-speed drill to avoid chipout or breakage on the exit side. Use screws specially designed for MDF, or type A or AB sheet metal, twinfast and fully threaded screws designed for use in particleboard. These provide better holding capacity than standard wood screws.

PILOT HOLES

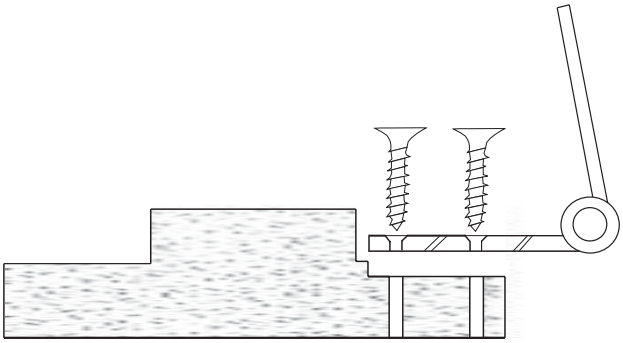

Working with MDF Mouldings

Sawing/Cutting

MDF is easily cut and installed at the job site using standard woodworking tools. These include a hand saw, miter box or small table saw, hammer or nail gun, nail set and tape measure.

When sawing MDF with power tools, use a carbide tipped combination blade for best results and keep the blades sharp.

Sawing MDF generates fine dust, so it is best to connect table saws to a vacuum system. For site use, a shop vacuum can be connected to small table saws with a sheet metal sleeve. When working with wood products, including MDF, on the job or in the home shop, wear at minimum the following safety equipment: a half-mask respirator (filter) that is NIOSH approved and has a HEPA filter rating printed on the package, side-shielded safety glasses and a long-sleeve shirt and gloves.

Installing Doors and Millwork

Prehung door units are generally installed first. Before installation ensure that all openings are plumb and square. Check to be sure the floor is level. If not, shim one side of the prehung unit.
Next, install the door casing and then the base. Crown mouldings, window sills and casing may then be installed along with other trim.

Joints

A long wall will generally require a joint in the moulding. The least noticeable way to join two pieces is with a 45 degree angle cut made with the miter box or power saw.

For inside corners, a coped joint will provide a smoother and more precise fit. A coped joint also can help hide wood movement due to humidity changes. For additional tips, consult a carpentry reference book.

Fasten to Framing

Base and crown mouldings should be fastened at each framing member 16 inch (406.4) or 24 inch (609.6 mm) on center. Do not cut the lengths to fit too tightly. Instead leave some room for caulking and minor expansion.

CAULKING AT INTERSECTION

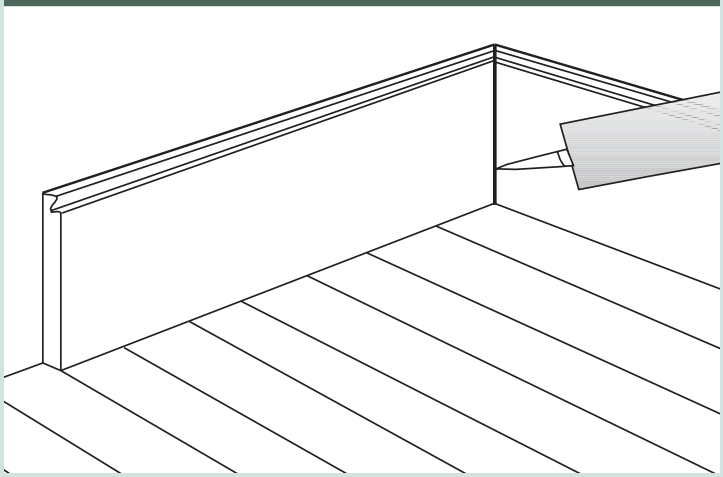

Floor Transitions

Differences in the height of flooring materials commonly requires accommodation during baseboard installation. For example, carpeted floors will be higher than hardwood floors or tile. Measure the height of the baseboard from the lower surface and trim back the baseboard height in the adjacent rooms to match the lower floor level. When practical, this problem can be avoided by installing moulding before carpet.

COPING A JOINT

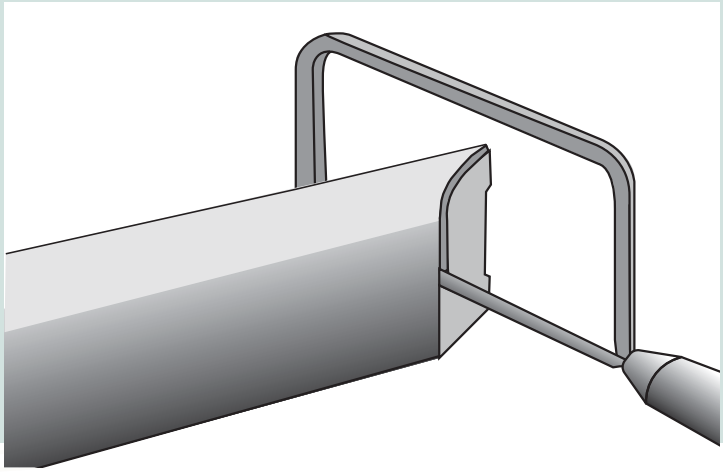

Painting and Finishing

Most MDF moulding comes pre-primed. Factory prime coats permit the use of both water-base and solvent-base finish coat applications.

Before painting, the surface should be cleaned to remove dust, dirt, fingerprints and grease. Fill nail holes and any minor surface indentations before applying the top coat.

Top coats may be solvent based or water based. Acrylic and alkyd paints also work well. Use satin or semi-gloss finishes and follow the paint manufacturer's recommendations for temperature ranges at time of application. Use lacquer topcoats only with a coat of lacquer primer over the preprimed moulding.

Avoid use of latex paints or lacquers at ambient temperatures of less than 55 degrees Fahrenheit (12.8 degrees Celsius) or relative humidity above 65%.

Also avoid the use of catalyzed lacquers and varnishes as they may not be compatible with the pre-primed surface.

The information in this document is believed to be reliable. However, the determination of suitability of this information for any use or application remains the sole responsibility of the user. No guarantees, representations or expressed or implied warranties are made regarding the accuracy and completeness of this information, and the Composite Panel Association (CPA) assumes no responsibility or liability for any loss or damage through reliance upon it. Users should check with the manufacturer for specific recommendations for fasteners and paints.

The Composite Panel Association (CPA), founded in 1960, represents the North American wood-based composite panel and decorative surfacing industries on technical, public policy, quality assurance and product acceptance issues. CPA General Members include the leading manufacturers of particleboard, medium density fiberboard (MDF), engineered wood siding and trim and hardboard in North America, representing more than 92% of industry manufacturing capacity. CPA Associate Members include manufacturers of decorative surfaces, furniture, cabinets, mouldings, doors and equipment, along with laminators, distributors, industry media and adhesive suppliers committed to product advancement and industry competitiveness. CPA is a vital resource for specifiers, manufacturers and users of industry products. The association provides leadership on federal, state and provincial regulatory and legislative matters of interest to industry. As an internationally recognized and accredited standards developer, CPA writes, publishes and maintains the industry's definitive ANSI product standards. CPA also operates the International Testing Center (ITC) and manages the Grademark Certification Program, the largest and most stringent testing and certification program of its kind for North American composite panel products. CPA developed the Eco-Certified Composite (ECC) Sustainability Standard and Certification Program, a voluntary industry standard for composite wood panels and finished products made with particleboard, MDF, hardboard and engineered wood siding and trim.

© Copyright 2025 Composite Panel Association

All rights reserved. Reproduction in whole or in part is prohibited without prior express written authorization from CPA.